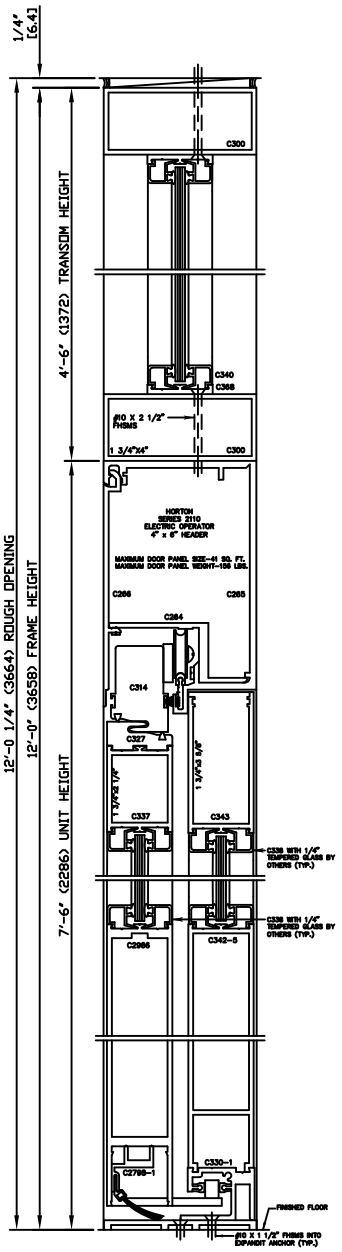

VERTICAL SECTION 1/3
DOOR SHOWN IN OPEN POSITION

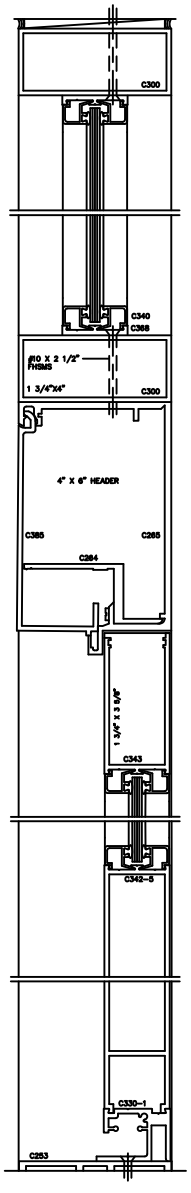

CENTERLITE SECTION 2/3

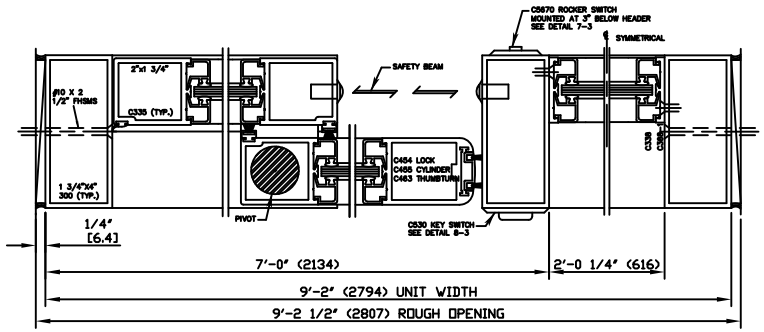

HORIZONTAL SECTION "O-SX" 3/3

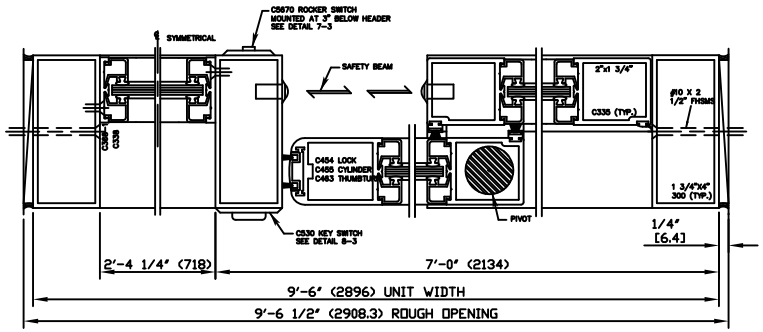

HORIZONTAL SECTION "SX-O" 4/3

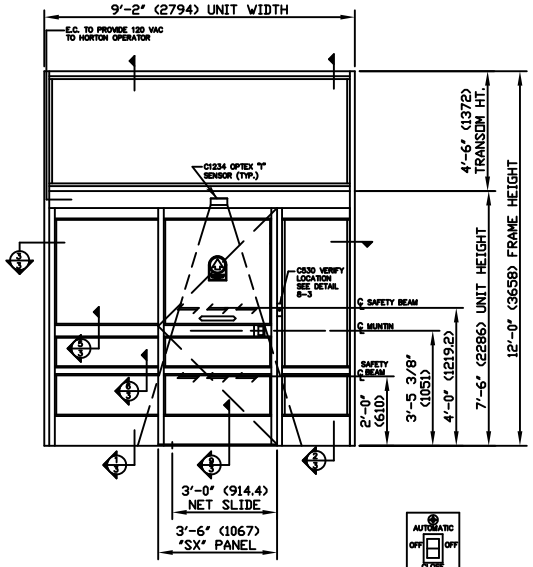

ELEVATION "O-SX" 10/3

C5670 SWITCH 7/3
FIELD MOUNTED & LOCATED AT 3" BELOW HEADER SEE 3/3

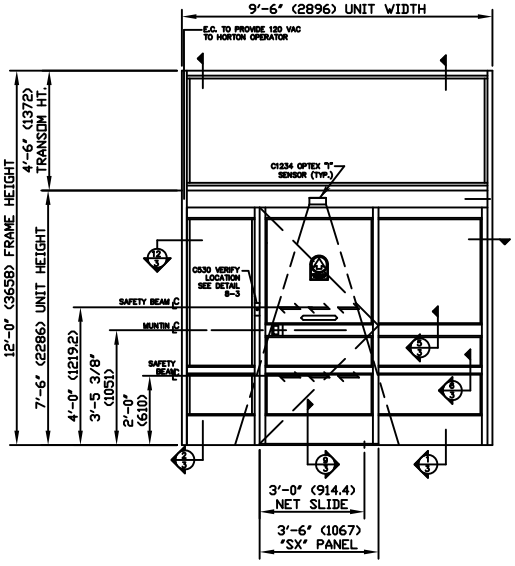

ELEVATION "SX-O" 11/3

PACKAGE LIST	
QTY	DESCRIPTION
2	SERIES 2110 AUTOMATIC SLIDING DOOR Size: 9'-2" & 9'-6" Wide X 7'-6" High Type: O-SX & SX-O Glass Prep. 1/4"
2	TRANSOM FULL WIDTH WITH 1 VERTICAL
4	C2889-1 4" HORIZONTAL MUNTIN
4	C337 2 1/4" HORIZONTAL MUNTIN
4	C2966 10" BOTTOM RAIL
1	C7698 1/4" X 4" CONTINUOUS THRESHOLD
1	C253 1/4" X 4" SILL THRESHOLD
2	STAINLESS STEEL FLUSH PULL
4	C7775 SAFETY BEAMS
2	C1238 OPTEX "T" SENSOR
2	C5670 ROCKER SWITCH
2	C530 KEY SWITCH MOMENTARY CONTACT
4	C1630-2 TWO SIDED DECAL FOR 2-WAY TRAFFIC
4	C1682 DECAL "IN EMERGENCY PUSH TO OPEN"

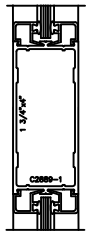

MUNTIN SECTION 5/3

MUNTIN SECTION 6/3

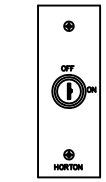

C530 KEY SWITCH 8/3
FIELD MOUNTED & LOCATED

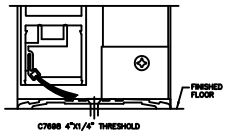

THRESHOLD SECTION 9/3

NOTE:

REFER TO SHEET 1 OF 3 FOR DOOR LOCATIONS IN VESTIBULE.

INTERIOR UNIT DESIGN

PLEASE COMPLETE/VERIFY THE FOLLOWING:

PACKAGE QUANTITY:	
ROUGH OPENING: MUST HOLD SIZE REQUIREMENTS	
STORE TYPE: ☐ STD ☐ GLASS TOWER (ALL 204-R1) ☐ SECURITY STORE (ADD POST)	
ANODIZED FINISH: (SELECT ONE) ☐ 204-R1 CLEAR ☐ 313-R1 DARK BRONZE ☐ SPECIAL (incl. paint sample w/dwg.) Note: All Exposed Aluminum will be 204-R1 Unless Otherwise Noted	
REQUIRED INSTALLATION DATE:	
JOB SUPERINTENDENT:	
JOBSITE PHONE:	

A DIVISION OF OVERHEAD DOOR CORPORATION
4242 BALDWIN BOULEVARD
CORPUS CHRISTI, TEXAS 78405-3399
361-882-5501 1-800-531-3111
FAX: 361-882-6510, 1-800-531-3108
http://www.hortondoors.com

JOB NAME:	
LOCATION:	
DISTRIBUTOR:	
GENERAL CONTRACTOR:	
INVOICE #	
CUSTOMER ORDER #	
DATE:	Sheet 3 of 3 Revision: